ILLUSTRATED PARTS LIST

MODEL NUMBER **ST 224**
PRODUCT NUMBER 961 91 00-87
MFG. ID. NUMBER 96191008700

586 90 64-27 Rev. 2

SNOW THROWER - MODEL NO. ST 224 (96191008700), PRODUCT NO. 961 91 00-87

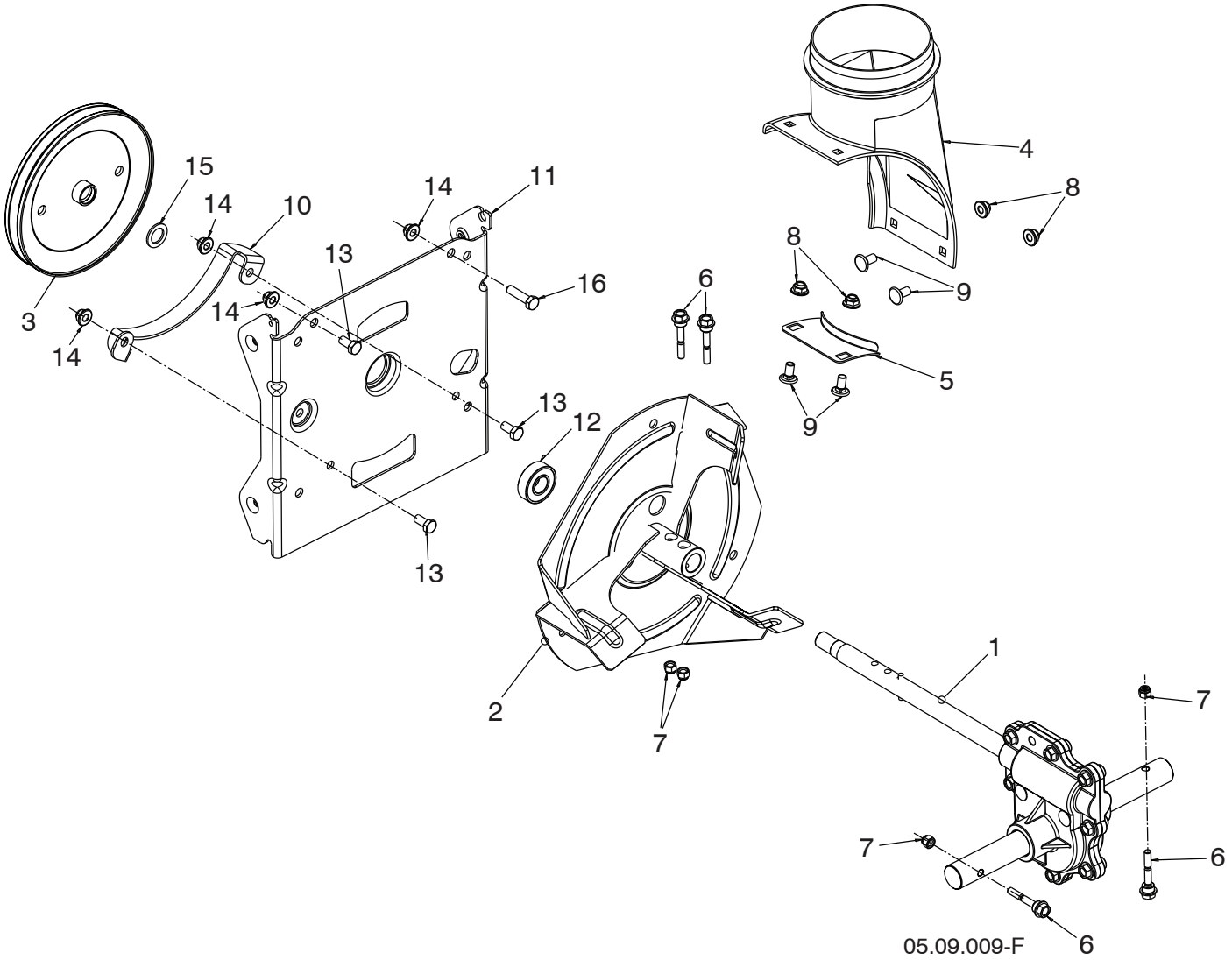

NOTE: All component dimensions given in U.S. inches. 1 inch = 25.4 mm
IMPORTANT: Use only Original Equipment Manufacturer (O.E.M.) replacement parts.
Failure to do so could be hazardous, damage your snow thrower and void your warranty.

SNOW THROWER - MODEL NO. ST 224 (96191008700), PRODUCT NO. 961 91 00-87

KEY NO.	PART NO.	DESCRIPTION
1	586 71 48-01	GEARBOX AUGER
2	586 60 72-02	IMPELLER STEEL
3	586 71 52-01	PULLEY IMPELLER SCREW ON
4	585 05 69-01	CHUTE DISCHARGE BASE
5	532 17 86-75	BRACKET CORNER DISCHARGE BASE
6	585 51 18-01	BOLT SHEAR 1/4-20
7	873 80 04-00	NUT NYLOCK 1/4-20
8	585 69 13-01	NUT FLANGE NYLOCK 5/16-18 - BLK
9	585 69 12-01	BOLT CARRIAGE WAFER HEAD 5/16-18 X 5/8 BLK
10	581 63 20-02	BRACKET BELT KEEPER LOWER
11	581 59 25-02	BRACKET INTERFACE
12	532 19 87-91	BEARING BALL
13	532 16 31-83	SCREW HEX HEAD 5/16-18 X 5/8
14	532 42 79-42	NUT FLANGE NYLOCK 5/16-18
15	587 39 27-01	WASHER IMPELLER PULLEY 1.00D X .641ID X .075THK
16	874 52 05-20	SCREW HEX HEAD 5/16-18 X 1.25

NOTE: All component dimensions given in U.S. inches. 1 inch = 25.4 mm
IMPORTANT: Use only Original Equipment Manufacturer (O.E.M.) replacement parts.
Failure to do so could be hazardous, damage your snow thrower and void your warranty.

SNOW THROWER - MODEL NO. ST 224 (96191008700), PRODUCT NO. 961 91 00-87

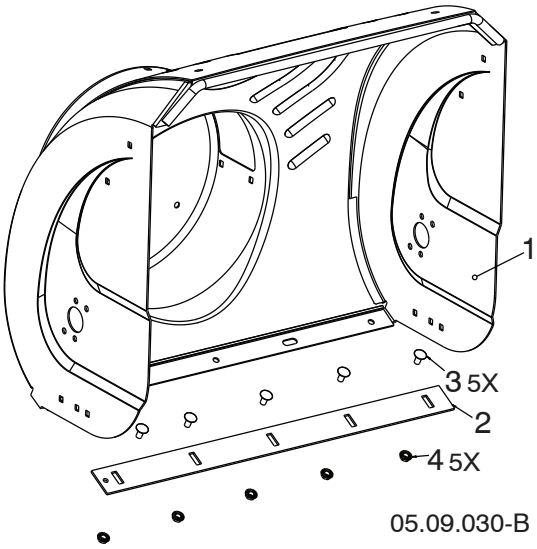

KEY NO.	PART NO.	DESCRIPTION
1	586 18 39-05	AUGER HOUSING
2	532 40 78-25	SCRAPER BAR
3	872 27 05-05	CARRIAGE BOLT 5/16-18 X .625 GR5
4	532 15 53-77	NUT 5/16-18

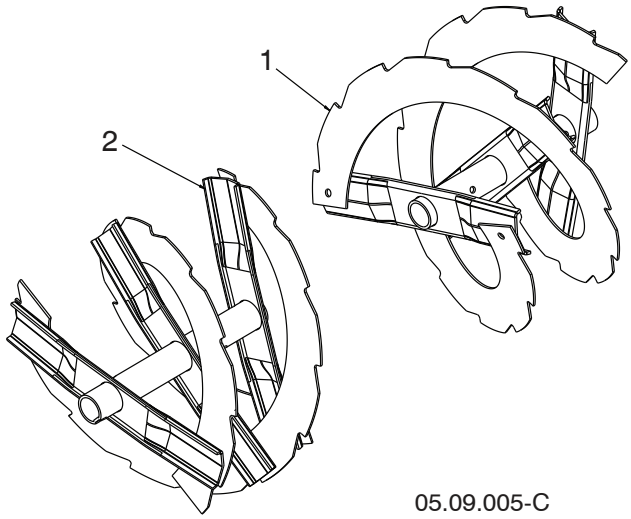

KEY NO.	PART NO.	DESCRIPTION
1	587 19 10-01	AUGER WELD RIB LH 24
2	585 54 42-01	AUGER WELD RIB RH 24

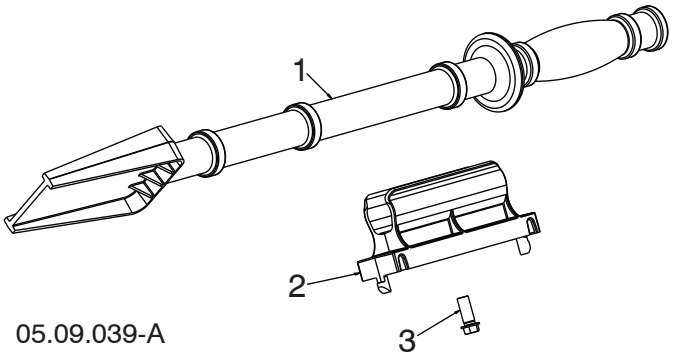

KEY NO.	PART NO.	DESCRIPTION
1	532 19 21-99	TOOL CLEANOUT
2	532 40 54-00	CLIP CLEANOUT TOOL
3	532 19 41-89	SCREW HEX WASHER 13-16 X 5/8

NOTE: All component dimensions given in U.S. inches. 1 inch = 25.4 mm
IMPORTANT: Use only Original Equipment Manufacturer (O.E.M.) replacement parts.
Failure to do so could be hazardous, damage your snow thrower and void your warranty.

SNOW THROWER - MODEL NO. ST 224 (96191008700), PRODUCT NO. 961 91 00-87

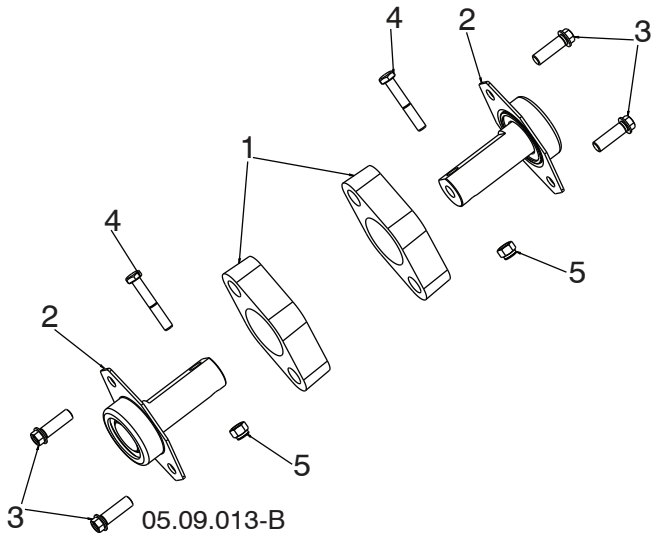

KEY NO.	PART NO.	DESCRIPTION
1	532 18 81-70	PLASTIC RETAINER
2	532 42 77-62	AUGER BALL BEARING
3	584 29 94-01	SCREW HI-LO 5/16-14 X 1.00 - BLK
4	874 78 04-26	SCREW 1/4-20 X .625
5	873 80 04-00	NUT 1/4-20

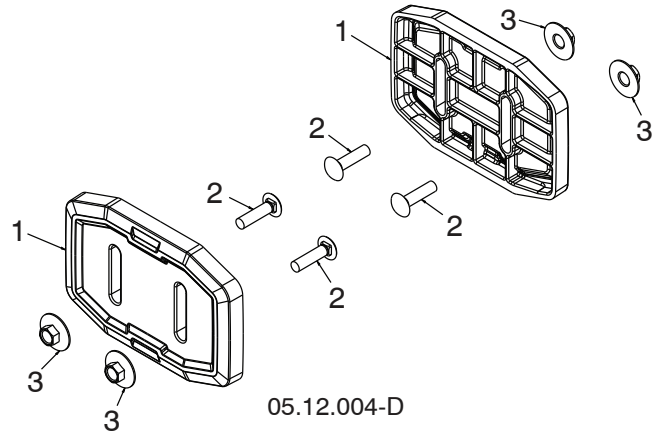

KEY NO.	PART NO.	DESCRIPTION
1	583 83 88-01	SKID SHOW UHMW
2	585 80 29-01	BOLT CARR BLK 5/16-18 X 1.25
3	585 80 28-01	NUT HEX 5/16-18 LRG FLG

NOTE: All component dimensions given in U.S. inches. 1 inch = 25.4 mm
IMPORTANT: Use only Original Equipment Manufacturer (O.E.M.) replacement parts.
Failure to do so could be hazardous, damage your snow thrower and void your warranty.

SNOW THROWER - MODEL NO. ST 224 (96191008700), PRODUCT NO. 961 91 00-87

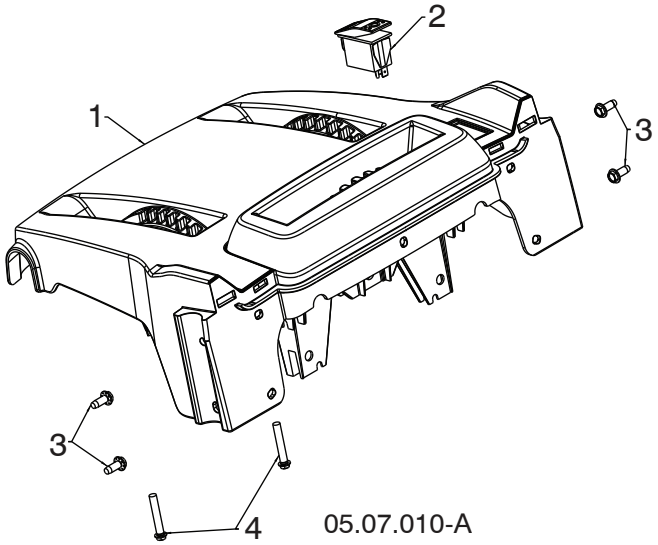

KEY NO.	PART NO.	DESCRIPTION
1	581 13 12-04	CONSOLE BASE MULTICONT GRAY-MS498
2	585 80 50-01	SWITCH GRIP HEATED BLACK
3	817 06 04-10	SCREW TA SEMI GIMLE 1/4-20 X .62
4	581 32 95-01	SCREW HEX WASHER HI-LO 13-16 X 1.50

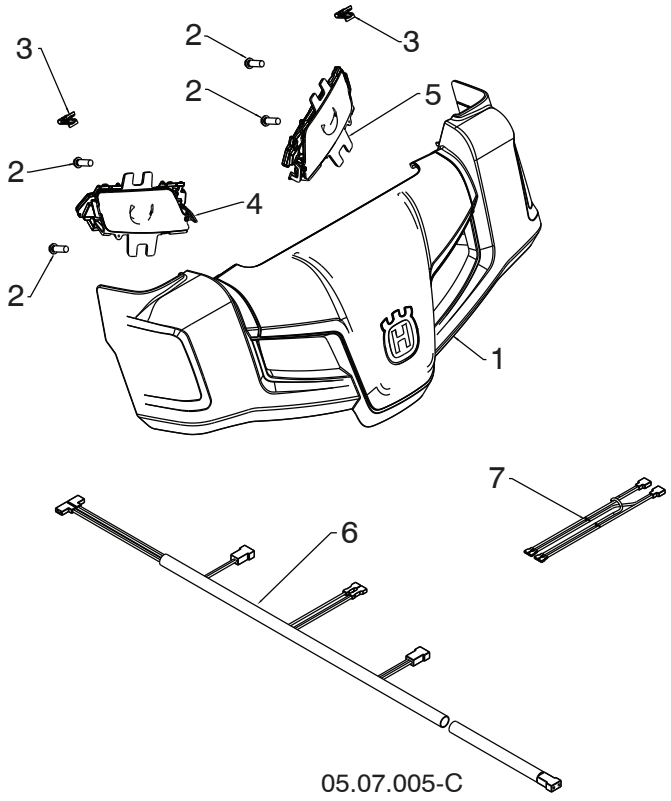

KEY NO.	PART NO.	DESCRIPTION
1	581 12 79-01	HUSQVARNA CONSOLE COVER ASM
2	532 19 41-89	SCREW HI-LO 13-16 X 5/6
3	581 92 87-01	CLIP PANEL
4	586 72 35-01	LIGHT ASM LED HUSQ RH
5	586 72 36-01	LIGHT ASM LED HUSQ LH
6	587 53 57-01	WIRE HARNESS LIGHT & GRIP
7	585 86 83-01	WIRE HARNESS LIGHT JUMPER

NOTE: All component dimensions given in U.S. inches. 1 inch = 25.4 mm
IMPORTANT: Use only Original Equipment Manufacturer (O.E.M.) replacement parts.
Failure to do so could be hazardous, damage your snow thrower and void your warranty.

SNOW THROWER - MODEL NO. ST 224 (96191008700), PRODUCT NO. 961 91 00-87

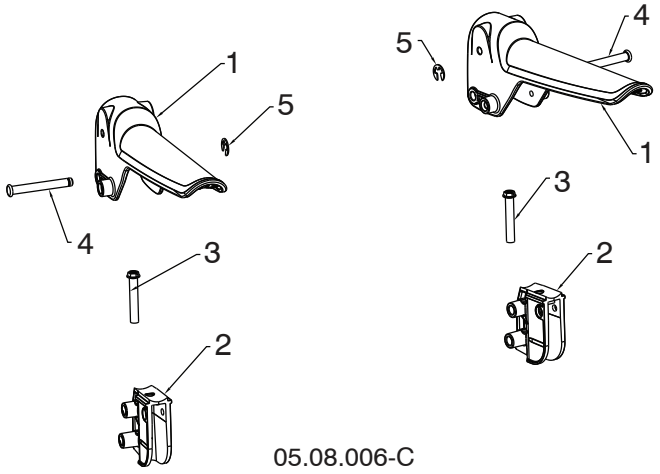

KEY NO.	PART NO.	DESCRIPTION
1	587 46 30-01	LEVER CONTROL DSST
2	581 20 81-01	LEVER PIVOT CONTROL ASM
3	585 69 07-01	SCREW HEX HD 10-24 X 1.50
4	532 43 17-62	PIN GROOVED
5	812 00 00-14	E-RING

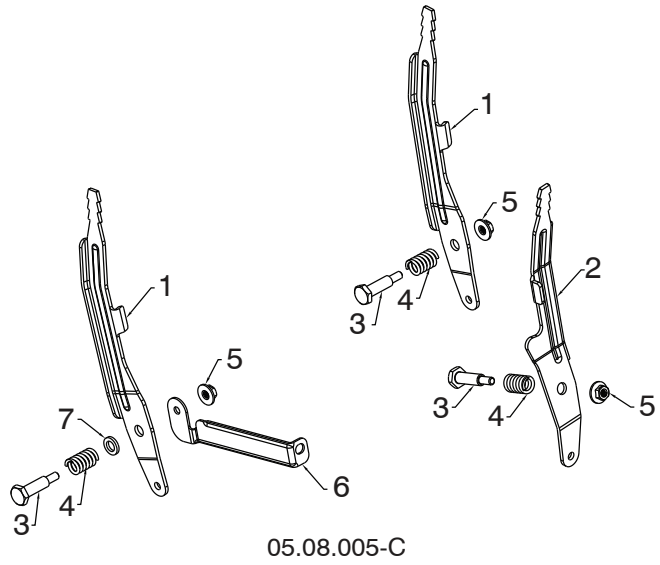

KEY NO.	PART NO.	DESCRIPTION
1	581 12 39-02	LEVER CONTROL SPEED/DEFL
2	581 24 16-02	LEVER CONTROL CHUTE ROT
3	581 32 97-01	BOLT SHOULDER 1/4-20
4	581 32 96-01	SPRING COMPRESSION
5	586 66 89-01	NUT FL LOCK 1/4-20
6	584 46 84-02	BRACE SUPPORT SPEED
7	587 03 13-01	WASHER .625 X .375 X .094 NYLON 6/6

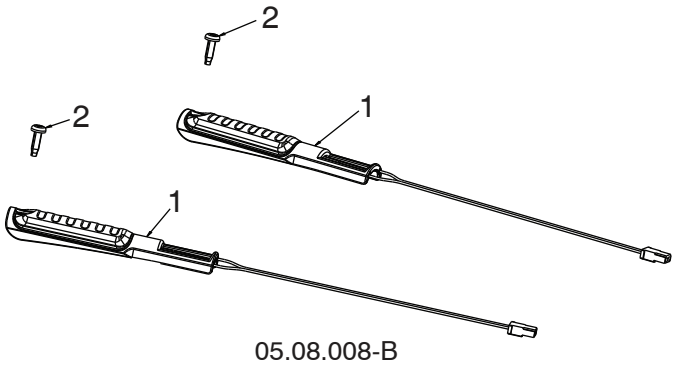

KEY NO.	PART NO.	DESCRIPTION
1	581 14 63-01	GRIP HANDLE HEATED
2	532 44 22-50	SCREW PAN HD TORX 1/4-20 X .75

NOTE: All component dimensions given in U.S. inches. 1 inch = 25.4 mm
IMPORTANT: Use only Original Equipment Manufacturer (O.E.M.) replacement parts.
Failure to do so could be hazardous, damage your snow thrower and void your warranty.

SNOW THROWER - MODEL NO. ST 224 (96191008700), PRODUCT NO. 961 91 00-87

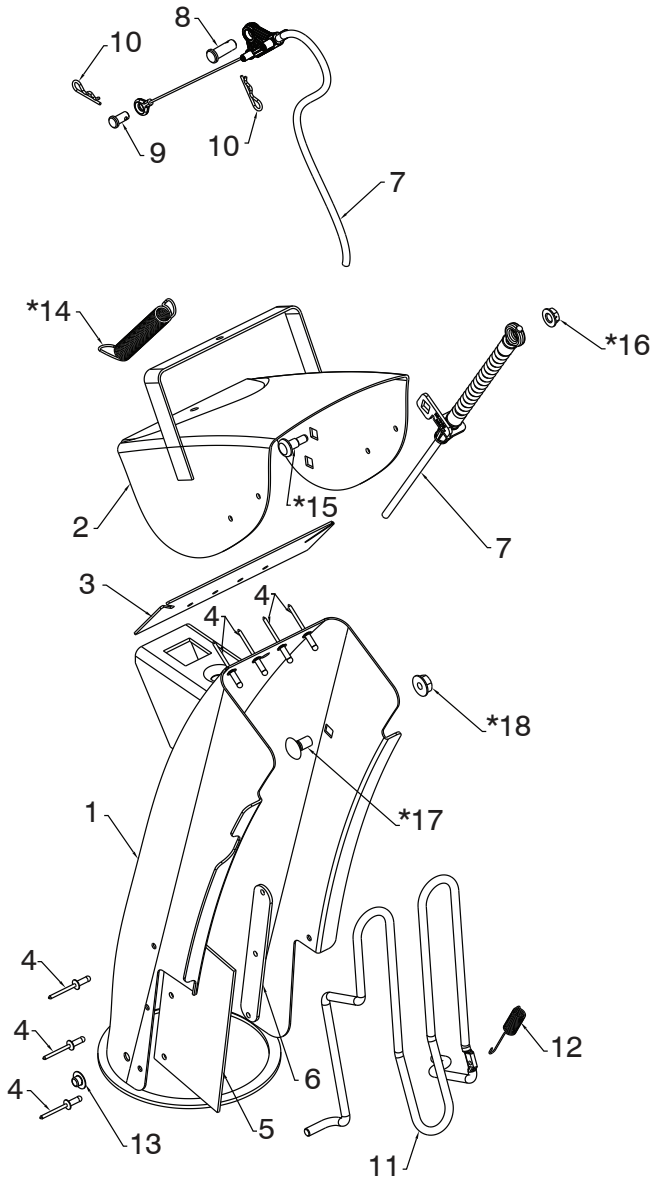

05.11.008-D

KEY NO.	PART NO.	DESCRIPTION
1	532 44 40-41	CHUTE WELDMENT
2	532 18 41-13	DEFLECTOR WELDMENT
3	532 42 03-25	DEFLECTOR SEAL
4	532 12 84-15	POP RIVET
5	532 43 03-24	CHUTE SNOW SHIELD
6	532 42 17-28	SHIELD STRAP RETAINER
7	586 96 15-01	CABLE ASM DEFLECTOR - BOWDEN
8	581 32 94-01	PIN CLEVIS 5/16 X .875
9	585 80 83-01	PIN CLEVIS 1/4 X .312
10	532 42 33-03	HAIRPIN RETAINER
11	532 43 55-82	CHUTE GUARD
12	532 43 56-16	GUARD RETURN SPRING
13	532 05 93-49	PUSH NUT
*14	532 18 45-05	DEFLECTOR SPRIN
*15	585 83 22-01	SHOULDER BOLT 1/4-20 X .375
*16	585 69 14-01	NUT 1/4-20
*17	585 83 20-01	CARRIAGE BOLT 3/8-16 X .625
*18	873 97 05-00	NUT 5/16-18

NOTE: ALL ITEMS MARKED WITH AN * ARE PROVIDED IN THE BAG OF ITEMS SHIPPED LOOSE WITH THE PRODUCT

NOTE: All component dimensions given in U.S. inches. 1 inch = 25.4 mm
IMPORTANT: Use only Original Equipment Manufacturer (O.E.M.) replacement parts.
Failure to do so could be hazardous, damage your snow thrower and void your warranty.

SNOW THROWER - MODEL NO. ST 224 (96191008700), PRODUCT NO. 961 91 00-87

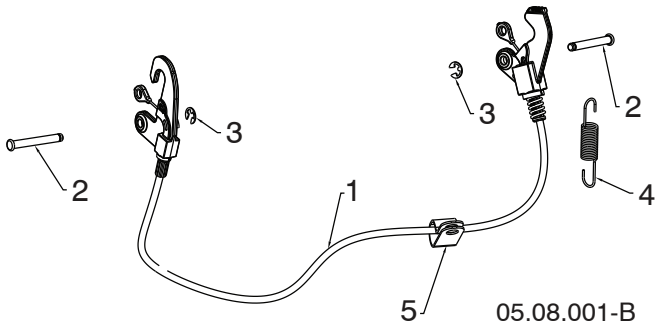

KEY NO.	PART NO.	DESCRIPTION
1	580 66 47-01	CABLE INTERLOCK
2	532 43 17-62	PIN GROOVED
3	812 00 00-14	E-RING
4	581 15 12-01	SPRING RETURN
5	532 19 79-91	CLIP CABLE BLACK

NOTE: All component dimensions given in U.S. inches. 1 inch = 25.4 mm
IMPORTANT: Use only Original Equipment Manufacturer (O.E.M.) replacement parts.
Failure to do so could be hazardous, damage your snow thrower and void your warranty.

SNOW THROWER - MODEL NO. ST 224 (96191008700), PRODUCT NO. 961 91 00-87

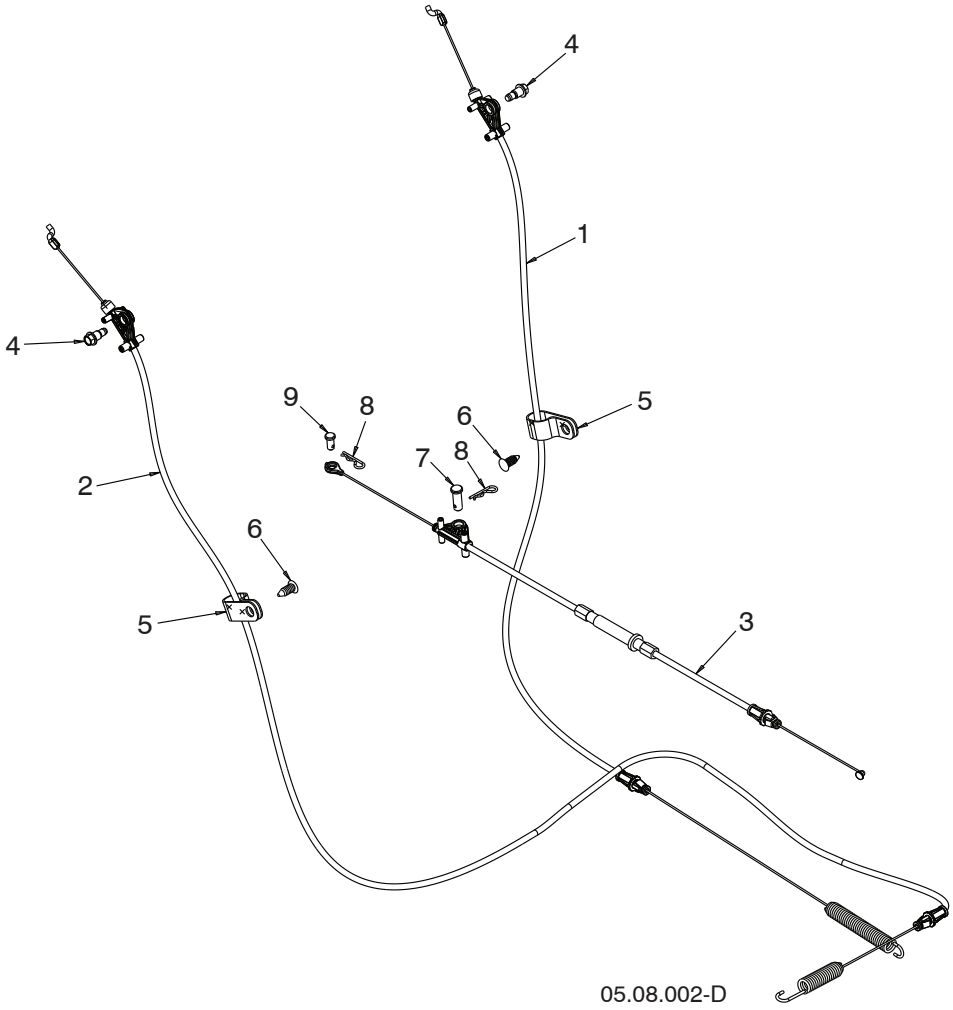

KEY NO.	PART NO.	DESCRIPTION
1	581 12 83-01	CABLE CONTROL DRIVE
2	587 42 87-01	CABLE CONTROL AUGER
3	587 34 38-01	CABLE CONTROL SPEED
4	581 72 61-01	BOLT SHOULDER 1/4
5	532 19 79-91	CLIP CABLE
6	532 42 81-24	FASTENER PUSH .250
7	581 32 94-01	PIN CLEVIS 5/16
8	532 42 33-03	HAIRPIN
9	585 80 83-01	PIN CLEVIS 1/4

NOTE: All component dimensions given in U.S. inches. 1 inch = 25.4 mm
IMPORTANT: Use only Original Equipment Manufacturer (O.E.M.) replacement parts. Failure to do so could be hazardous, damage your snow thrower and void your warranty.

SNOW THROWER - MODEL NO. ST 224 (96191008700), PRODUCT NO. 961 91 00-87

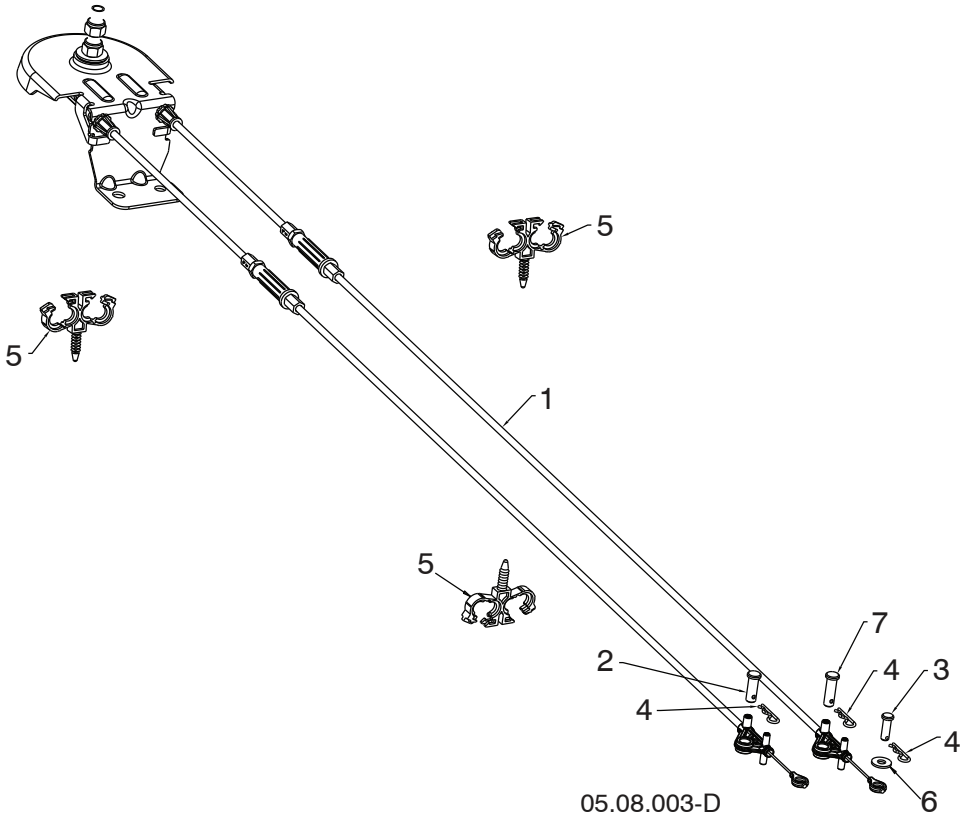

KEY NO.	PART NO.	DESCRIPTION
1	581 68 03-01	CABLE ROTATOR ASM
2	581 32 94-01	PIN CLEVIS 5/16 X 7/8
3	877 10 08-12	PIN CLEVIS 1/4 X 3/4
4	532 42 33-03	HAIRPIN SOFT ZINC
5	584 65 22-01	CLIP CONDUIT DOUBLE
6	586 68 21-01	WASHER
7	587 13 08-01	PIN CLEVIS 5/16 X 1

NOTE: All component dimensions given in U.S. inches. 1 inch = 25.4 mm
IMPORTANT: Use only Original Equipment Manufacturer (O.E.M.) replacement parts. Failure to do so could be hazardous, damage your snow thrower and void your warranty.

SNOW THROWER - MODEL NO. ST 224 (96191008700), PRODUCT NO. 961 91 00-87

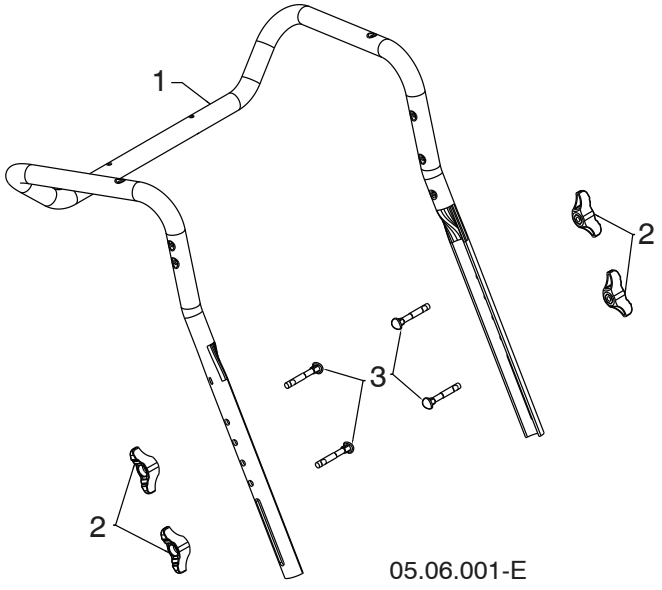

KEY NO.	PART NO.	DESCRIPTION
1	581 12 36-03	UPPER HANDLE
2	532 19 19-38	HANDLE KNOB STD BLACK
3	587 35 90-01	BOLT 5/16-18 X 1.75 CONCAVE HEAD

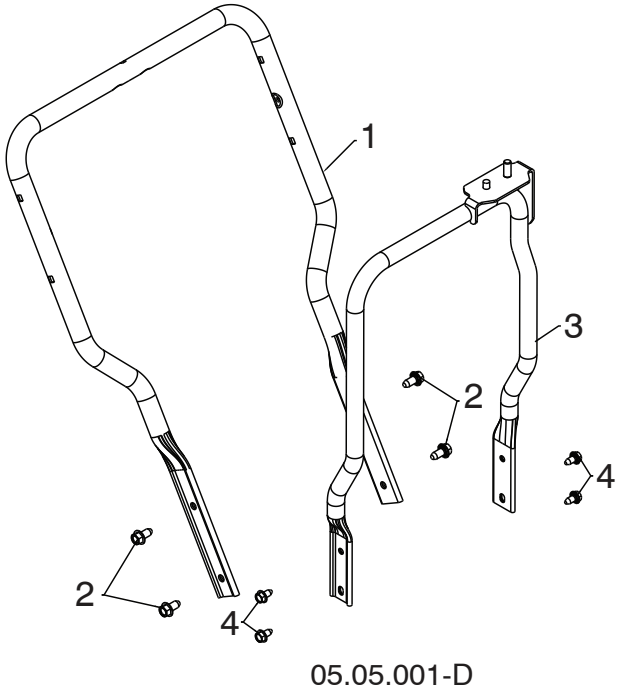

KEY NO.	PART NO.	DESCRIPTION
1	581 12 35-03	LOWER HANDLE
2	817 00 06-12	SCREW HEX WASH HD 3/8-16 X .75
3	581 62 20-02	CHUTE ROTATOR SUPPORT ASM
4	817 00 05-10	BOLT HEX 5/16-18

NOTE: All component dimensions given in U.S. inches. 1 inch = 25.4 mm
IMPORTANT: Use only Original Equipment Manufacturer (O.E.M.) replacement parts.
Failure to do so could be hazardous, damage your snow thrower and void your warranty.

SNOW THROWER - MODEL NO. ST 224 (96191008700), PRODUCT NO. 961 91 00-87

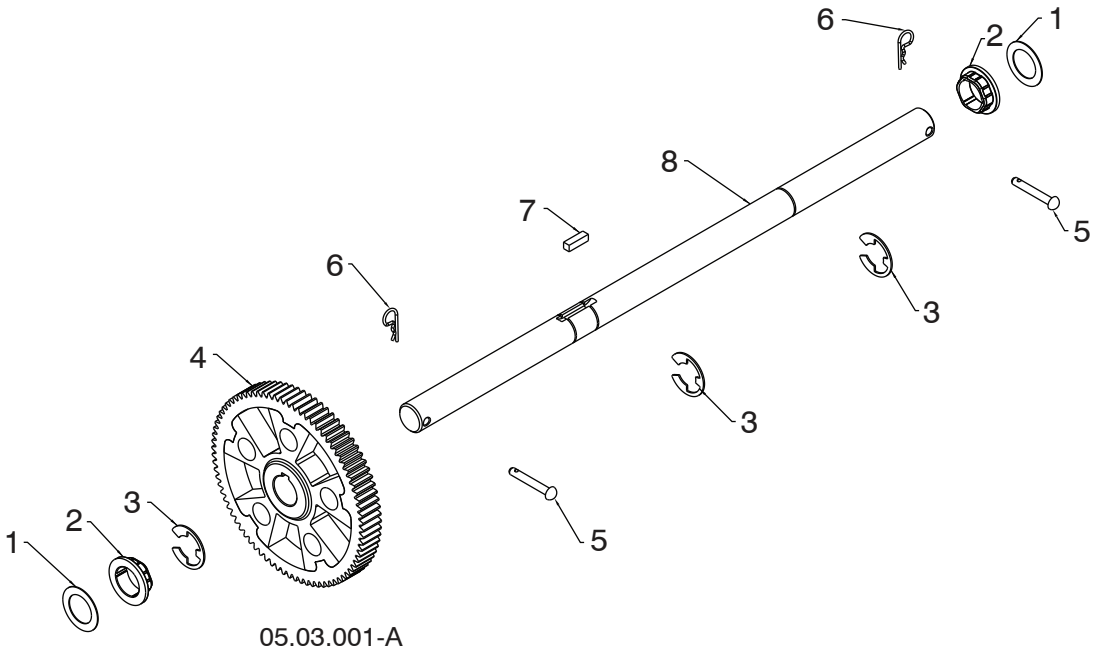

KEY NO.	PART NO.	DESCRIPTION
1	532 44 49-49	WASHER 1.00
2	581 12 23-01	HEX BUSHING 1 SHAFT
3	812 00 00-53	RETAINER RING
4	581 12 22-02	GEAR 80T DRIVEN
5	532 17 12-71	RIVET RD HD DRILLED 1/4 DIA
6	532 12 47-88	RETAINER SPRING
7	532 18 92-82	SQUARE KEY 1/4 X .875
8	581 12 20-01	AXLE SHAFT

NOTE: All component dimensions given in U.S. inches. 1 inch = 25.4 mm
IMPORTANT: Use only Original Equipment Manufacturer (O.E.M.) replacement parts. Failure to do so could be hazardous, damage your snow thrower and void your warranty.

SNOW THROWER - MODEL NO. ST 224 (96191008700), PRODUCT NO. 961 91 00-87

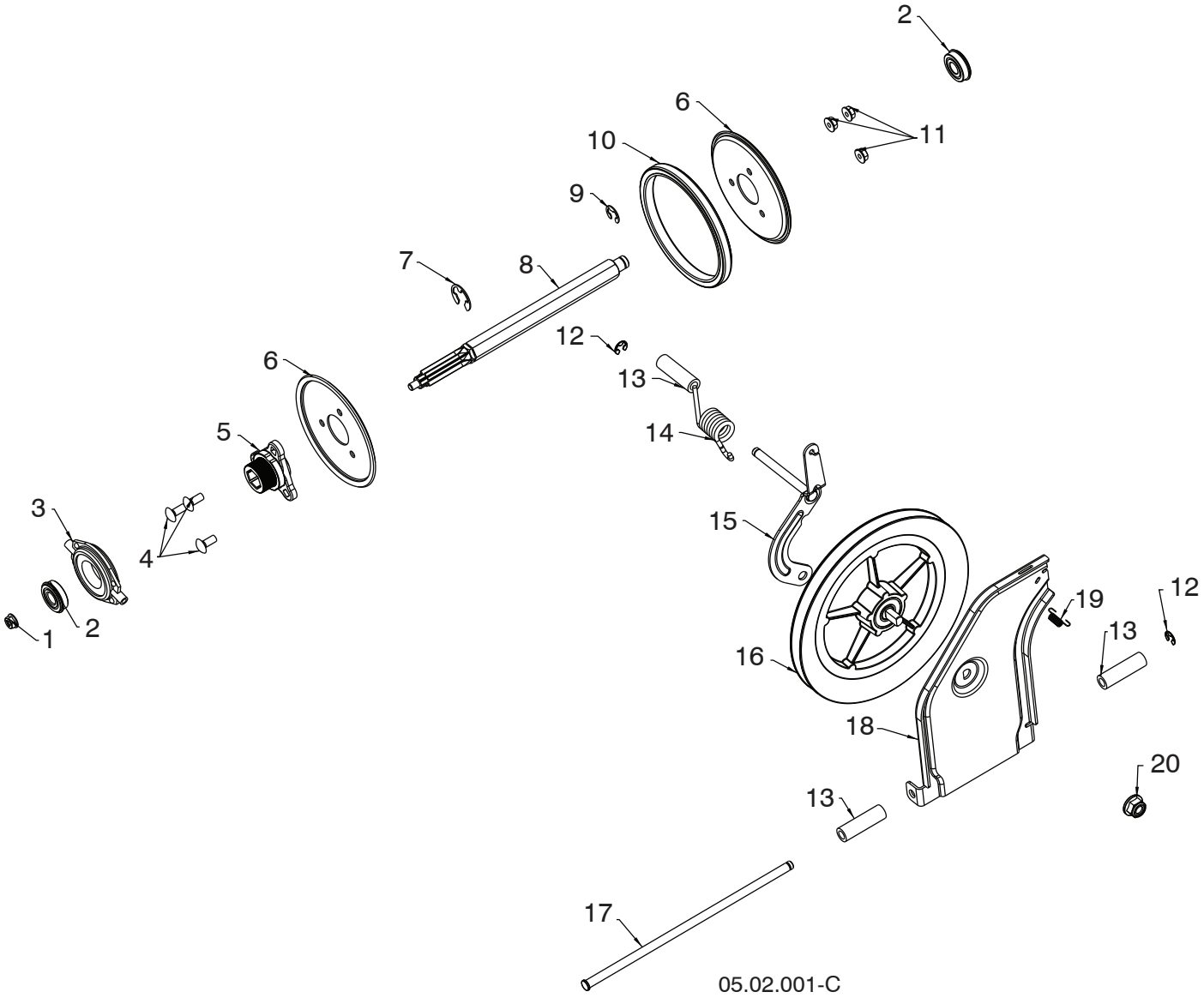

NOTE: All component dimensions given in U.S. inches. 1 inch = 25.4 mm
IMPORTANT: Use only Original Equipment Manufacturer (O.E.M.) replacement parts.
Failure to do so could be hazardous, damage your snow thrower and void your warranty.

SNOW THROWER - MODEL NO. ST 224 (96191008700), PRODUCT NO. 961 91 00-87

KEY NO.	PART NO.	DESCRIPTION
1	585 69 15-01	NUT HEX FLANGE LK 5/16-18
2	580 75 62-01	BEARING 9/16 I.D. 1622-2RSNR
3	532 17 53-44	TRUNNION BEARING ASM
4	872 11 05-06	BOLT CARRIAGE 5/16-18 X .75 GR5
5	581 09 09-01	HUB RUBBER WHEEL
6	581 09 10-02	RUBBER WHEEL PLATE
7	812 00 00-22	E-RING
8	581 12 19-01	SHAFT 7 TOOTH REDUCTION
9	580 75 61-01	RETAINING RING 1622-2RSNR
10	581 09 11-01	RUBBER WHEEL RING
11	532 75 11-53	NUT HEX FLANGE LK 5/16-18
12	812 00 00-07	E-RING RETAINER 375
13	581 73 27-01	DRIVE SPACER
14	581 31 53-01	DRIVE TORSION SPRING
15	581 45 42-03	YOKE BRACKET WELDMENT
16	581 32 84-01	FRICTION PULLEY DISC COMBO
17	581 12 30-01	ROD TIP PLATE
18	581 44 69-03	FRICTION SWING PLATE PULL
19	532 19 38-85	LATCH SPRING
20	521 99 11-01	NUT HEX FLANGE LK 1/2-13

NOTE: All component dimensions given in U.S. inches. 1 inch = 25.4 mm
IMPORTANT: Use only Original Equipment Manufacturer (O.E.M.) replacement parts.
Failure to do so could be hazardous, damage your snow thrower and void your warranty.

SNOW THROWER - MODEL NO. ST 224 (96191008700), PRODUCT NO. 961 91 00-87

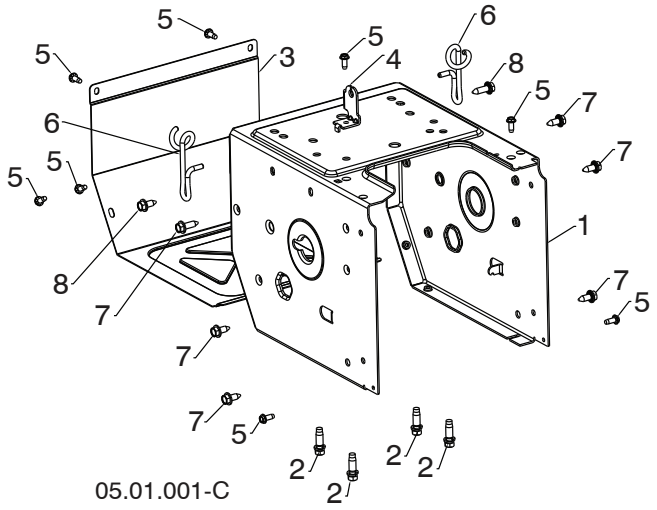

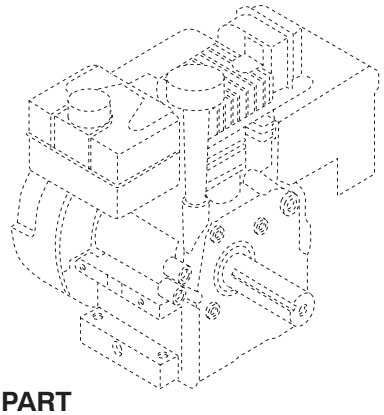

KEY NO.	PART NO.	DESCRIPTION
- -	580 42 60-04	COMPLETE LCT ENGINE
1	580 83 94-05	FRAME
2	532 15 04-06	ENGINE BOLT 3/8-16 X 1.208 DOGPOINT
3	580 83 95-05	FRAME COVER
4	581 12 24-02	SHIFTER BRACKET
5	817 06 04-10	SCREW HEX WASHER 1/4-20 X 5/8
6	585 20 60-01	WIREFORM SUPPORT CABLE
7	532 42 88-67	BOLT HEXHD WASHER 5/16-18 X .75
8	585 21 75-01	BOLT HEXHD WASHER 5/16-18 X 1.00

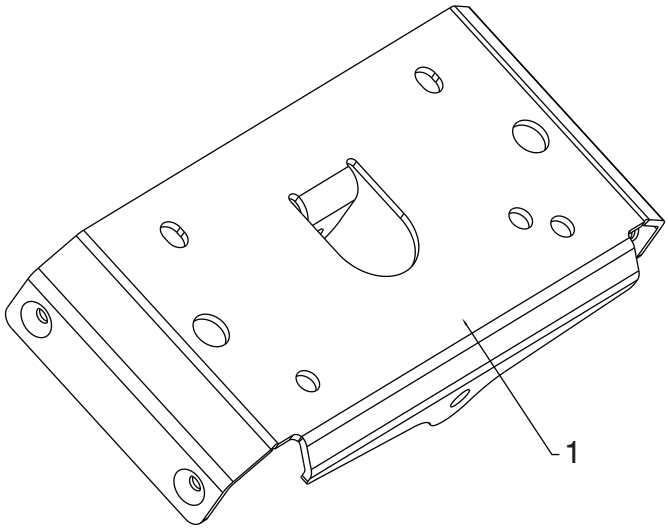

KEY NO.	PART NO.	DESCRIPTION
1	583 94 05-02	SMALL MOUNTING PLATE

NOTE: All component dimensions given in U.S. inches. 1 inch = 25.4 mm
IMPORTANT: Use only Original Equipment Manufacturer (O.E.M.) replacement parts.
Failure to do so could be hazardous, damage your snow thrower and void your warranty.

SNOW THROWER - MODEL NO. ST 224 (96191008700), PRODUCT NO. 961 91 00-87

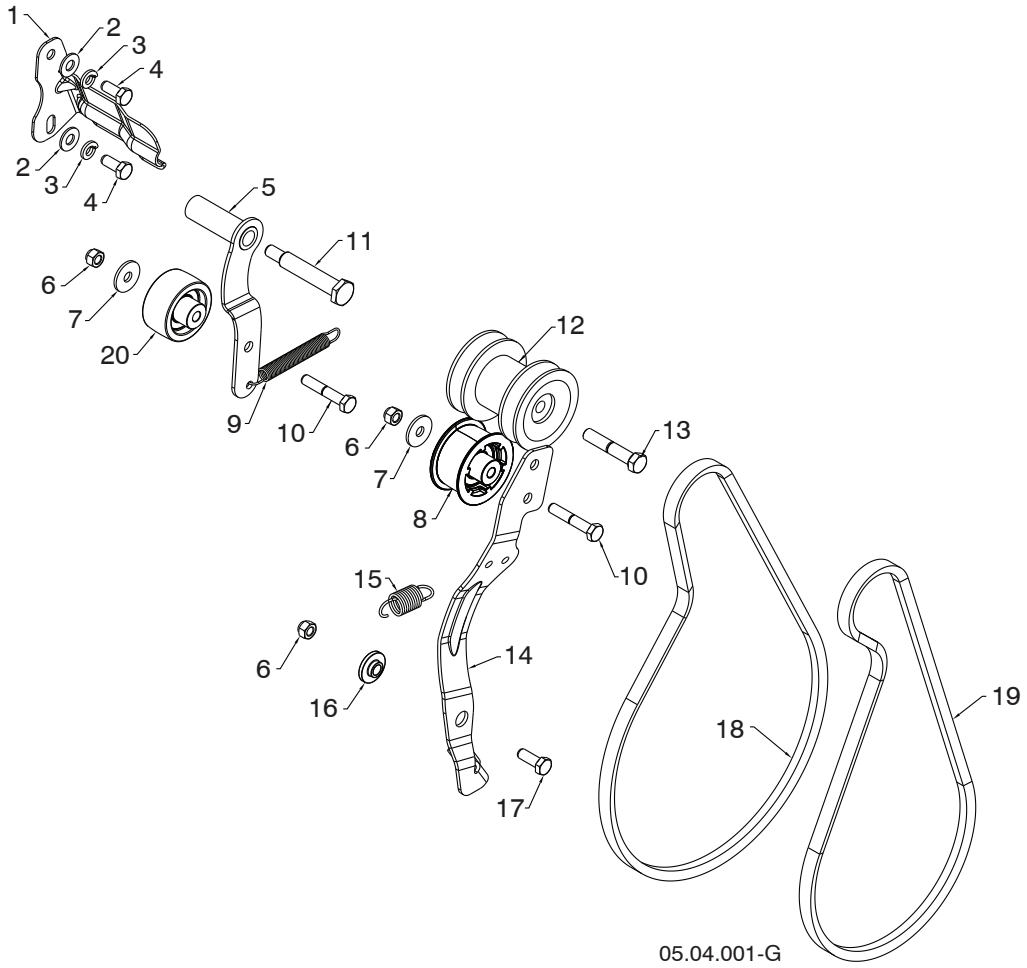

KEY NO.	PART NO.	DESCRIPTION
1	581 62 37-02	BELT KEEPER BRACKET
2	819 11 12-16	WASHER 11/32 X 3/4 X 16 GA
3	810 04 05-00	LOCKWASHER 5/16 SPLIT HVY
4	874 61 05-12	CAPSCREW HEXHD 5/16-24 X .75 GR5
5	581 33 82-03	IDLER ARM DRIVE WELDMENT
6	873 80 05-00	NUT NYLOCK 5/16-18
7	532 05 92-89	WASHER FLAT .328 X 1.00 X .097
8	581 14 14-01	IDLER PULLEY 2.0 W/SPACER
9	580 75 30-01	RETURN SPRING IDLER ARM DRIVE
10	874 76 05-28	BOLT HEXHD 5/16-18 X 1.75
11	581 41 38-01	SHOULDER BOLT 5/16-24 X 2.15
12	587 46 29-01	PULLEY ASM ENGINE
13	532 17 96-17	BOLT HEXHD 3/8-24 X 2.00
14	580 83 11-04	ARM IDLER
15	587 03 12-01	RETURN SPRING IDLER ARM
16	587 34 37-01	BUSHING IDLER PIVOT
17	874 76 05-14	BOLT HEXHD 5/16-18 X .875
18	584 21 61-01	DRIVE BELT 4L X 38.2
19	581 83 24-01	IMPELLER BELT
20	586 88 02-01	IDLER PULLEY 2.0 FLANGELSS W/SPACER

NOTE: All component dimensions given in U.S. inches. 1 inch = 25.4 mm
IMPORTANT: Use only Original Equipment Manufacturer (O.E.M.) replacement parts.
Failure to do so could be hazardous, damage your snow thrower and void your warranty.

SNOW THROWER - MODEL NO. ST 224 (96191008700), PRODUCT NO. 961 91 00-87

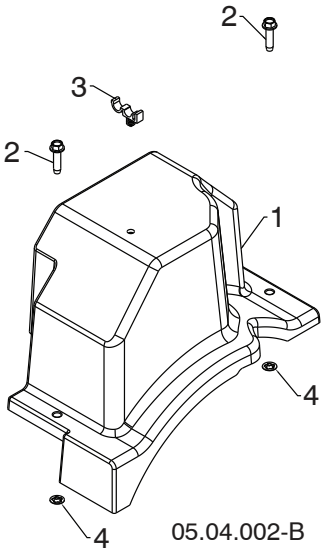

KEY NO.	PART NO.	DESCRIPTION
1	581 04 99-01	BELT COVER BLACK
2	585 69 11-01	BOLT HEX WSH THDRL 1/4-20 X 1
3	532 14 50-06	CABLE GUIDE
4	532 42 30-62	PALNUT 1/4 IN

NOTE: All component dimensions given in U.S. inches. 1 inch = 25.4 mm
IMPORTANT: Use only Original Equipment Manufacturer (O.E.M.) replacement parts.
Failure to do so could be hazardous, damage your snow thrower and void your warranty.

SNOW THROWER - MODEL NO. ST 224 (96191008700), PRODUCT NO. 961 91 00-87

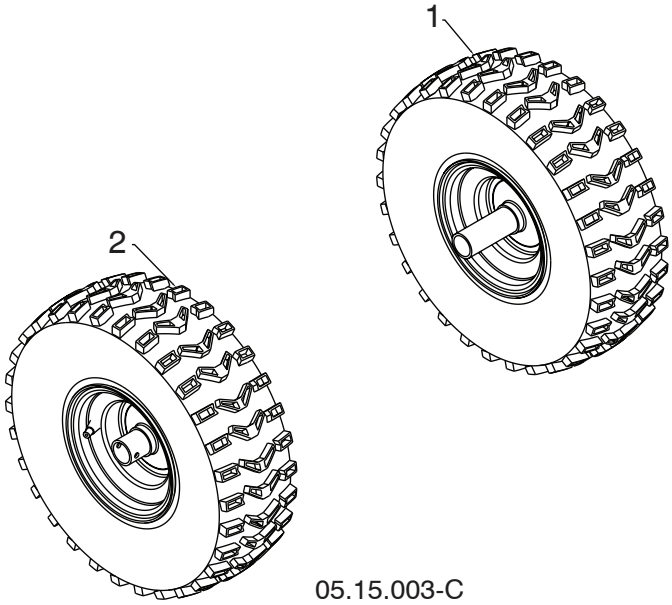

KEY NO.	PART NO.	DESCRIPTION
1	586 71 04-01	WHEEL 15X5.00 NPS LH 1.00 K478
2	586 71 03-01	WHEEL 15X5.00 NPS RH 1.00 K478

NOTE: All component dimensions given in U.S. inches. 1 inch = 25.4 mm
IMPORTANT: Use only Original Equipment Manufacturer (O.E.M.) replacement parts.
Failure to do so could be hazardous, damage your snow thrower and void your warranty.

SNOW THROWER - MODEL NO. ST 224 (96191008700), PRODUCT NO. 961 91 00-87

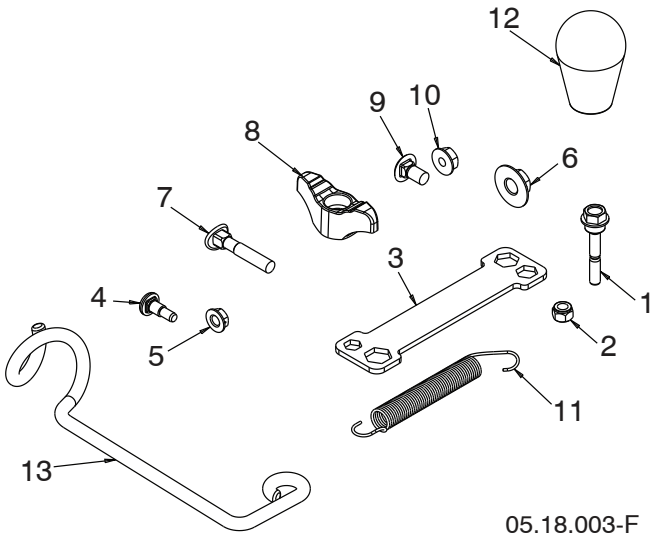

KEY NO.	PART NO.	DESCRIPTION
1	585 51 18-01	BOLT 1/4- 20 X 1.81
2	873 80 04-00	NUT NYLOCK 1/4-20
3	532 42 91-12	WRENCH
4	585 83 22-01	BOLT SHOULDER
5	585 69 14-01	NUT HEX FL 1/4-20 CTR
6	585 69 10-01	NUT NYLOCK 3/8-16
7	587 35 90-01	BOLT 5/16-18 X 2.25 CONCAVE
8	532 19 19-38	KNOB 5/16-18 TWO WING
9	585 83 20-01	BOLT 5/16-18 X .625
10	873 97 05-00	NUT SERR FL LOCK 5/16-18
11	532 18 45-05	SPRING DEFLECT CHUTE
12	581 69 75-01	KNOB SOFT TOUCH SLOTTED
13	581 89 73-01	SUPPORT ROTATION CABLE
- -	587 42 10-03	KIT REPLACEMENT BAG OF PARTS

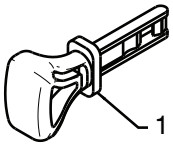

01.14.009-B

KEY NO.	PART NO.	DESCRIPTION
1	532 44 30-59	SAFETY IGNITION KEY KIT

NOTE: All component dimensions given in U.S. inches. 1 inch = 25.4 mm
IMPORTANT: Use only Original Equipment Manufacturer (O.E.M.) replacement parts.
Failure to do so could be hazardous, damage your snow thrower and void your warranty.

SNOW THROWER - MODEL NO. ST 224 (96191008700), PRODUCT NO. 961 91 00-87

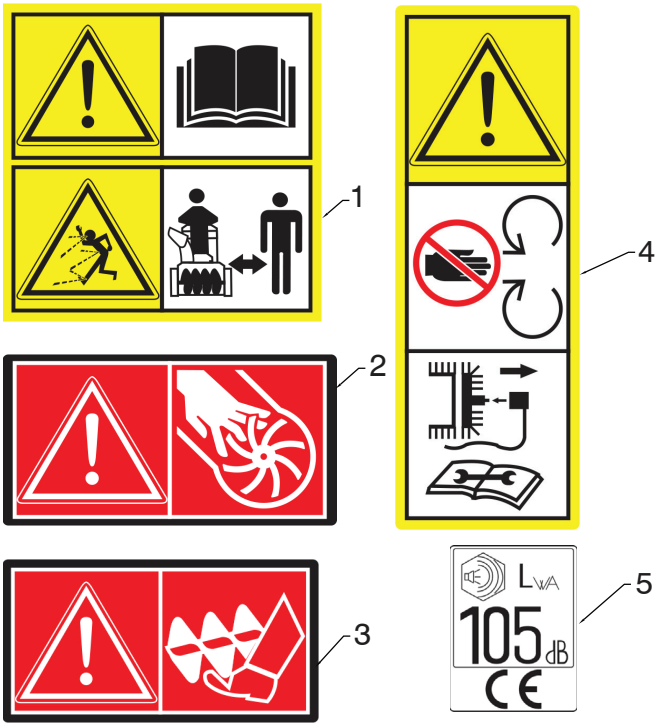

05.16.002-A

KEY NO.	PART NO.	DESCRIPTION
1	532 18 40-45	DECAL AUGER
2	532 19 96-82	DECAL CHUTE
3	532 19 96-83	DECAL AUGER SAFETY
4	532 18 40-28	DECAL BELT GUIDE
5	532 18 04-33	DECAL NOISE LEVEL

NOTE: All component dimensions given in U.S. inches. 1 inch = 25.4 mm
IMPORTANT: Use only Original Equipment Manufacturer (O.E.M.) replacement parts.
Failure to do so could be hazardous, damage your snow thrower and void your warranty.

SNOW THROWER - MODEL NO. ST 224 (96191008700), PRODUCT NO. 961 91 00-87

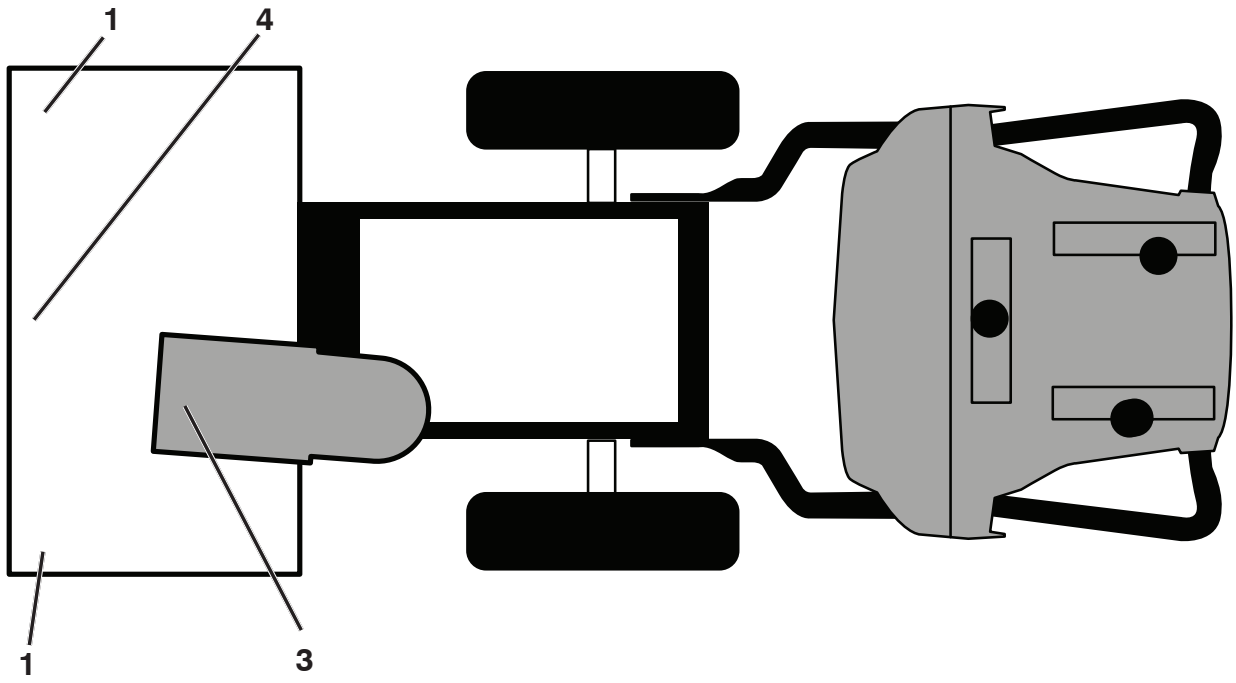

KEY NO.	PART NO.	DESCRIPTION
1	532 19 96-83	DECAL, DANGER
3	532 19 96-82	DECAL, DANGER, DEFLECTOR
4	532 18 40-45	DECAL, DANGER
- -	115 68 60-20	OPERATOR'S MANUAL, EURO
- -	115 68 60-10	OPERATOR'S MANUAL, SCAN
- -	115 68 60-50	OPERATOR'S MANUAL, EBLOC
- -	115 68 60-40	OPERATOR'S MANUAL, BALTIC

NOTE: All component dimensions given in U.S. inches. 1 inch = 25.4 mm
IMPORTANT: Use only Original Equipment Manufacturer (O.E.M.) replacement parts.
Failure to do so could be hazardous, damage your snow thrower and void your warranty.

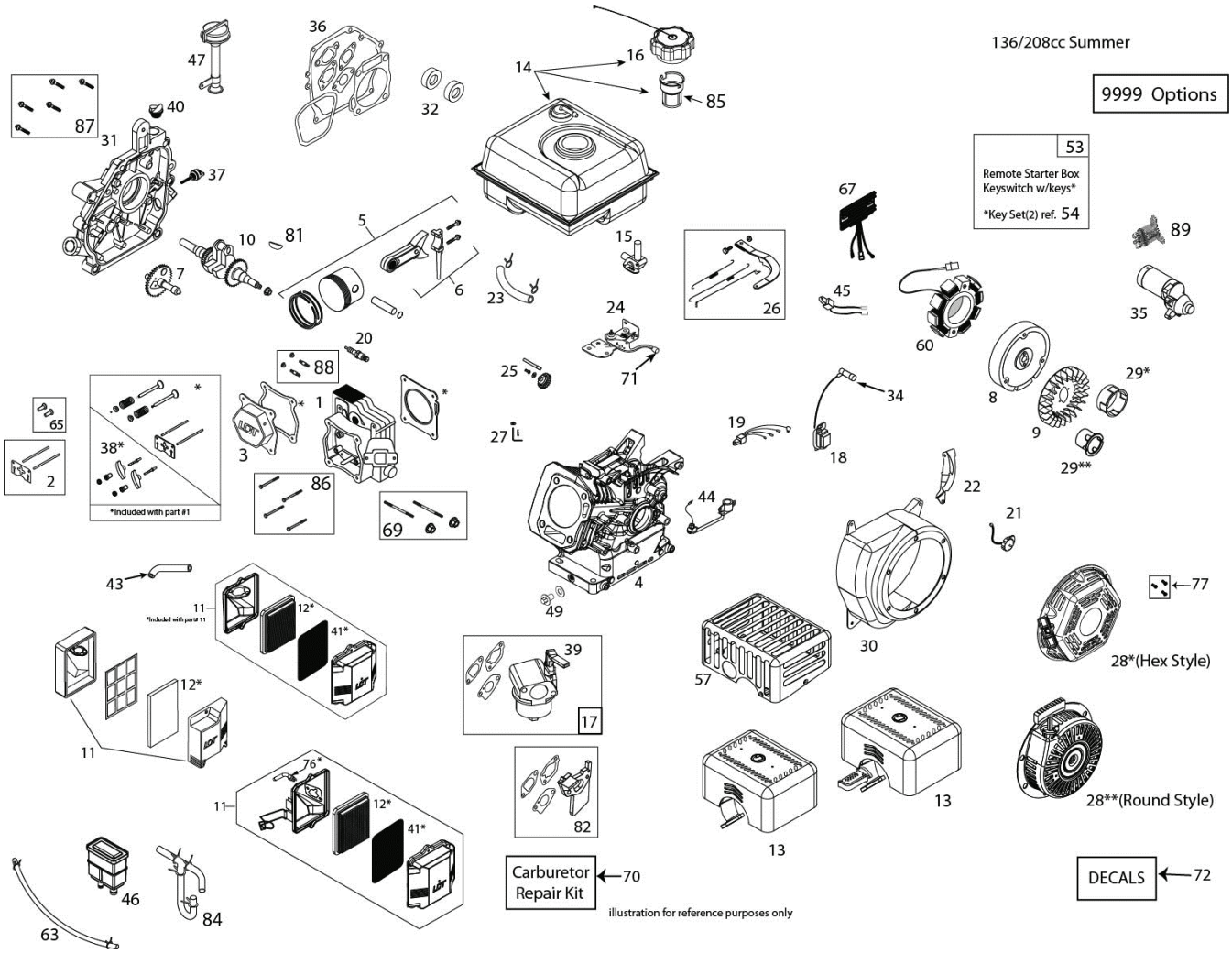

KEY NO.	PART NO.	DESCRIPTION
1	532 42 05-78	CYLINDER HEAD ASSEMBLY - 208CC (INCL. GASKET)
2	532 42 05-79	PUSH ROD & PLATE KIT (208CC) (INCL. VALVE COVER GSKT)
3	532 42 05-80	VALVE COVER (208CC) (INCL. GASKET)
4	532 43 65-67	CYLINDER - 208CC GEN LL SNOW
5	532 42 05-82	PISTON & ROD ASSEMBLY (208CC)
6	532 42 05-83	CONNECTING ROD ASSEMBLY (208CC)
7	532 42 05-84	CAMSHAFT - MCR (208CC)
8	532 42 92-35	FLYWHEEL - ELECTRIC START (2-CHARGING MAGNETS)(208CC)
9	532 42 05-86	COOLLNG FAN - FLYWHEEL (PLASTIC - 208CC)

KEY NO.	PART NO.	DESCRIPTION
10	532 44 66-42	CRANKSHAFT (#18 KEYED 208CC SNOW)
13	532 43 65-63	MUFFLER ASSEMBLY-GEN LL SNOW
14	532 43 65-64	FUEL TANK (208CC-SNOW) (2.7L BLACK W/PLASTIC CAP - GEN II)
15	532 42 92-34	FUEL TANK ON/OFF VALVE - GEN II SNOW
16	532 42 49-42	FUEL TANK CAP - BLACK CLLCK STYLE (VENTED)
17	532 43 65-65	CARBURETOR (L10-1) (GEN II SNOW 208CC- W/GSKTS & SPA-CER)
18	532 44 39-34	IGNITION COIL (CDI) (208/254CC) (STANDARD)
19	532 42 49-55	CDI MODULE - BLACK BOX (USED ON 2-PC IGNITION SYSTEM)

NOTE: All component dimensions given in U.S. inches. 1 inch = 25.4 mm
IMPORTANT: Use only Original Equipment Manufacturer (O.E.M.) replacement parts.
Failure to do so could be hazardous, damage your snow thrower and void your warranty.

KEY NO.	PART NO.	DESCRIPTION
20	532 42 49-39	SPARK PLUG
21	532 42 49-57	ON/OFF SWITCH - ROCKER
23	532 43 21-44	FUEL HOSE KIT (1/4" ID X 318MM - SS SNOW)
24	532 42 92-59	SPEED CONTROL BRACKET (FIXED)
25	532 42 96-46	GOVERNOR GEAR ASSEMBLY (136/208CC)
26	581 76 87-01	GOVERNOR ARM & LINK KIT (208CC SNOW - 3600 FIXEDRPM)
27	532 42 06-02	GOVERNOR ARM PADDLE
28	532 43 69-67	RECOIL STARTER (ROUND STYLE-BLACK) 136/208CC GEN II SNOW
29	532 42 49-66	STARTER CUP (USE WITH HEX STYLE STARTER) (208CC SNOW)
30	580 96 05-01	BLOWER HOUSING - BLACK ELECTRIC START W/WELDNUT (208CC) (SN >1165H0313865)
30	581 19 20-01	BLOWER HOUSING - BLACK ELECTRIC START W/ INTEGRATED BAFFLE (SN >1265H0604537) (208CC SNOW)
31	532 42 06-06	CRANKCASE COVER ASSY-HOFT (THREADED) (INCL. GASKET) (SN <1265H0519257)
31	581 00 73-01	CRANKCASE COVER ASSY (PRESS-IN TYPE HOFT)(INCL. GASKET) (SN >1265H0519257)
32	532 42 95-99	OIL SEAL KIT (2 PCS FOR 3/4-INCH CRANKSHAFT)
34	532 43 69-66	SPARK PLUG BOOT - WITH METAL SHIELD (SNOW)
35	532 43 64-66	120V ELECTRIC STARTER (208/254CC GEN LL) (MOUNTING BOLTS ON SIDE OF BLOCK)
36	532 42 96-01	ENGINE GASKET KIT (208CC)
37	532 42 09-61	SMALL BLACK OIL DIPSTICK (PLASTIC)
38	532 42 96-91	ROCKER ARM KIT (208CC)(INCL. GASKET)
39	532 42 92-24	CHOKE CONTROL KNOB (GEN II RED)
40	532 42 95-98	NON-REMOVABLE PLASTIC PLUG (136/208/254CC)
41	532 44 37-75	POLY PRE-FILTER (USE WITH ''P'' AIR CLEANER) (136/208CC)
43	580 35 34-01	BREATHER TUBE (136/208/254CC)
47	532 42 49-69	HIGH OIL-FILL TUBE/DIPS-TICK (THREADED) (SN <1265H0519257)
47	581 00 72-01	HIGH OIL-FILL TUBE/DIPS-TICK (PRESS-IN TYPE) (SN >1265H0519257)
49	532 43 54-95	OIL DRAIN PLUG W/WASHER (136/208/254CC)
50	532 43 65-61	HEATER BOX KIT (GEN LL 208CC SNOW)
52	532 42 49-49	PRIMER BULB WITH HOSE-SNOW
53	532 42 49-54	KEY SWITCH - SAFETY (PUSH/ PULL) SNOW (INCL. KEYS)
54	532 44 30-59	KEY SET - RED (2) (SNOW)
55	532 43 26-86	OIL DRAIN TUBE-SNOW (136/208CC)
59	532 43 65-62	FUEL TANK SKIRT (208CCL SNOW)
61	532 43 27-52	FUEL CONTROL KNOB (GEN II SNOW - RED)
65	581 37 28-01	TAPPET KIT (208/254CC)(SET OF 2)
69	532 42 49-51	CARBURETOR STUDS & COUPLLNG KIT-SNOW
70	580 35 36-01	CARBURETOR REPAIR KIT (136/208/254CC)
72	532 43 56-47	STORMFORCE LABEL KIT-208CC SNOW
74	581 76 88-01	MUFFLER HEAT SHIELD COVER (136/208/254)
77	532 43 26-88	RECOIL BOLT KIT (INCL. (3) MTG BOLTS)
78	581 45 93-01	BREATHER TUBE BRACKET
79	585 77 37-01	CARBURETOR COVER (136/208/254CC SNOW)
81		WOODRUFF FLYWHEEL KEYS (5-PACK) (5X6X18MM)
82	585 02 05-03	CARBURETOR SPACER (208/254CC)
85		FUEL TANK STRAINER
86	586 32 73-01	CYLINDER HEAD BOLT KIT (4) (136-179-208-254CC)
87	586 32 69-01	CC COVER BOLT KIT (6) (179-208-254CC)
87	586 32 69-01	CC COVER BOLT KIT (6) (179-208-254CC)
88	586 32 68-01	MUFFLER MTG STUD KIT (2)
9999	586 32 62-01	HIGH ALTITUDE JET (>5,000 FEET)(208CC L10-1 CARBURETOR)

NOTE: All component dimensions given in U.S. inches. 1 inch = 25.4 mm

IMPORTANT: Use only Original Equipment Manufacturer (O.E.M.) replacement parts. Failure to do so could be hazardous, damage your snow thrower and void your warranty.

09.04.14 TH